EIN3241: Human Factors and Ergonomics
Spring 2026

Practice Final Exam

Instructor: Dr. Jad Atweh

Part I — Multiple Choice and Fill in the Blank (20 points)

1. What key factor during WWII triggered the scientific expansion of HF/E?
a. Emergence of labor unions demanding safer work
b. Evidence that better tools increased productivity
c. Frequent human errors due to poorly designed military equipment
d. Advances in aerospace dominance requiring automation
e. Rise of repetitive strain injuries in factories

2. The below term describes the time required for a qualified worker to perform a job using a standard method under normal conditions:
a. Working time
b. Normal time
c. Standard time
d. Performance time
e. Elemental time

3. A job best suited for a time study usually:
a. Requires group collaboration
b. Involves manual labor and repetitive cycles
c. Is done only once per week
d. Must use advanced technology
e. Must be unpredictable in duration

4. In rating performance using the Westinghouse system, which of the following is **not** a factor?
a. Skill
b. Effort
c. Consistency
d. Posture
e. Conditions

5. Allowances account for all the following **except**:
a. Fatigue
b. Personal needs

c. Unavoidable delays
d. Normal time
e. Setup and preparation

6. 1 TMU equals:
a. 1 minute
b. 0.6 minutes
c. 0.036 seconds
d. 1.67 seconds
e. 0.1 seconds

7. The MTM motion element describing rotating the hand is:
a. Reach
b. Move
c. Grasp
d. Turn
e. Release

8. The principle that important displays should attract attention is:
a. Proximity compatibility
b. Redundancy gain
c. Salience compatibility
d. Visual momentum
e. Avoid resource competition

9. When designing safety alarms in a factory, a 15 dB increase above ambient noise is recommended to overcome:
a. Pitch masking
b. Temporary threshold shift
c. Loudness scaling
d. Sensorial-neural loss
e. Conductive impairment

10. Redundancy gain suggests:
a. Use only one signal dimension
b. Duplicate controls to reduce cost
c. Present information using multiple cues
d. Avoid discriminable features
e. Remove colors from displays

11. Minimizing information access cost means:
a. Fewer controls must be used
b. Frequently used items should be easy to reach
c. Displays should follow user expectations

d. Remove rarely used controls
e. Place all items close together

12. Avoiding absolute judgment tasks means:
a. Using more color levels
b. Requiring users to interpret one sensory dimension
c. Limiting the number of coded levels
d. Eliminating labels from displays
e. Using only auditory alarms

13. Peripheral vision is wider in the:
a) Vertical plane
b) Horizontal plane
c) Central field
d) Fovea only

14. A "Poor" coupling in lifting tasks refers to:
a. An object that allows hands to wrap around it
b. An object that is difficult to be grasped, with no handles or cutouts.
c. An object that has perfect load symmetry
d. An object that allows for horizontal lifting only
e. An object that is lifting below knuckle height only

15. A fatigued radiologist examining X-rays is MOST likely to experience:
a. Increased hits with decreased correct rejections
b. Lower sensitivity, causing increased misses
c. Increased β due to conservative bias
d. Better detectability due to expectancy effects
e. Faster bottom-up detection due to reduced scanning time

16. According to Fitts' Law, movement time will be longest when control targets are:
a. Large and far
b. Small and far
c. Small and near
d. Uniformly spaced but similar in color
e. Coded using redundant cues

17. A major limitation of A/B testing when used for HF/E evaluation is that:
a. It does not measure user performance quantitatively
b. It only works in laboratory settings
c. It identifies which design performs better but not why
d. It requires subjective workload data
e. It cannot be used on software or web interfaces

18. Ergonomic problems related to reach distances and body dimensions are classified as:
a. Musculoskeletal
b. Psychomotor
c. Anthropometric
d. Organizational

19. Two ROC curves have identical hit rates but differing false alarm rates. The curve with the lower P(FA) indicates:
a. Higher sensitivity (d')
b. Lower sensitivity but higher β
c. Equal d' but different noise distributions
d. Unreliable response criteria

20. Which of the following is an advantage of a seated work posture?
a. Greater physiological load
b. Improved blood circulation and less fatigue development
c. Better mobility for extended reaches
d. Enhanced ability to apply downward force

Part II — Short-Answer Questions (15 points)

1. Drinking water fountains can be more ergonomically designed. Consider designing a NON-ADJUSTABLE drinking water fountain specifically for an adult population.

a) (2 points) What percentile and anthropometric measure would you use to determine an appropriate height for the control (e.g. button) used to regulate water flow?
Use the 5th percentile of arm reach so that even the smallest adults can comfortably reach the control.

b) (2 points) What percentile and anthropometric measure would you use to determine an appropriate height for the actual water fountain from which water flows?
Use approximately the 50th percentile of standing elbow height (or just stature) to set the fountain lip height so the average adult can drink comfortably without excessive stooping or reaching.

2. (4 points) One of the features to consider in designing an ergonomic valve wrench is the length of the handle (shown in the image below). Determine what the appropriate length of the handle should be, given that the average and standard deviation of the population's hand breadth is 10 cm and 1.8 cm, respectively.

Assume hand breadth is normally distributed and design the handle length for the 95th percentile (to accommodate almost all users).

$$L = \mu + z_{0.95}\sigma = 10 \text{ cm} + (1.645)(1.8 \text{ cm}) = 10 + 2.961 \approx 13 \text{ cm}.$$

So, the appropriate handle length is $\boxed{L \approx 13 \text{ cm}}$.

3. (1.5 points) What is the rule of thumb for determining work surface height during standing?
Design working heights at 5-10 cm (2-4 in) below elbow height

4. (2 points) One of the research approaches used for addressing manual material handling (MMH) injuries is the "psychophysical approach." Explain what this approach entails.
Psychophysical approach lets workers adjust load/task conditions until they feel the setup is "acceptable," revealing perceived limits

5. (3.5 points) Take a look at the picture below. It is supposedly an "ergonomic" workstation for kids. The fact that it is smaller does make it more ergonomic. However, we have learned in class the different ergonomic design considerations for seated workstations. With these design considerations in mind, identify 7 ergonomic problems in this workstation.

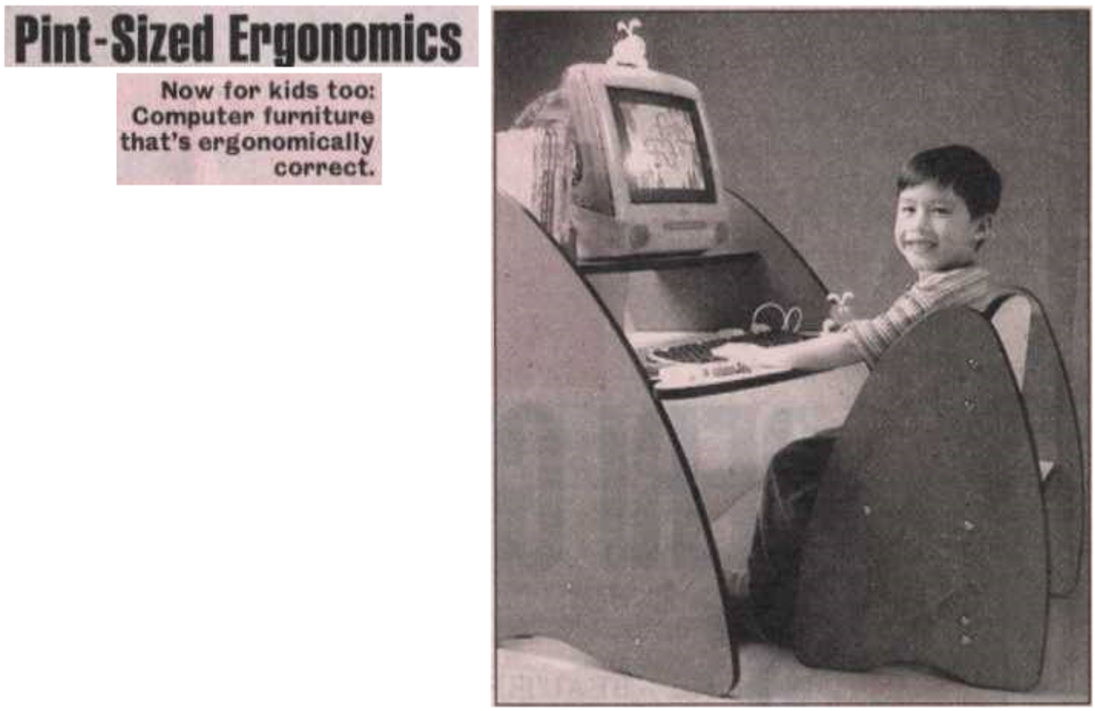

1) Monitor is far too high above eye level, forcing neck extension.
2) Keyboard and mouse are positioned too high relative to elbow height, causing elevated shoulders and poor wrist posture.
3) Chair height is non-adjustable, preventing proper knee angle and foot support.
4) No lumbar support: backrest is flat, offering no lower-back contour.
5) Seat depth is excessive for a child, preventing the back from contacting the backrest.
6) No footrest or floor contact: child's feet dangle, reducing stability and increasing thigh pressure.
7) Viewing distance is too close due to desk design, increasing visual strain and poor posture.
8) No arm support

9) Seat not cushioned
10) Others...

Part III — Exercises (65 points)

Problem 1 (10 points)

Assume that a worker is standing in front of a table with nothing in his hands. On the table, there is a stack of papers on one side and a stapler on another side that is mixed together with other office items in a basket.

Using the breakdown shown in the table below, fill in the MTM-1 basic motions, their symbols, their times in TMU, and finally find the standard time of this job in seconds. Use your best estimates for all the distances and weights. State any assumptions below your table.

Left hand description	Right hand description
	Get the stapler
Put the papers in the stapler	Align the stapler exactly to the top left of the papers
	Staple the papers
	Open the drawer under the table
	Put the stapler anywhere in the drawer and close the drawer

Left hand description	LH basic motions	TMU	TMU	RH basic motions	Right hand description
					Get the stapler
			12.9	R10C	Reach to the stapler 10" away
			7.3	G4A	Grasp the stapler
Put the papers in the stapler					**Align the stapler exactly to the top left of the papers**
Reach 14" for the papers	R14B	14.4	15.2	M12C	Move stapler 12 inches
Grasps the papers	G1A	2	10.4	P1NSE	Position stapler over papers
Move 10 inches	M10C	13.5			
Position papers	P1NSE	10.4			
Release papers	RL1	2			
					Staple the papers
			10.6	APA	Press down on stapler
			2	RL1	Release stapler
					Open the drawer under the table
			29	B	Bend
			9.6	R12A	Reach 12" to the drawer handle
			2	G1A	Grasp drawer
			7.5	D2E	Pull drawer open
			2	RL1	Release drawer
					Put the stapler anywhere in the drawer and close the drawer
			14.4	R14B	Reach 14" to stapler
			2	G1A	Grasp stapler
			20.6	M24B	Move stapler 24"
			2	RL1	Release stapler
			11.5	R10B	Reach 10" to the drawer
			2	G1A	Grasp the drawer
			10.6	APA	Apply pressure to close
			2	RL1	Release drawer
			31.9	AB	Arise from bend

Standard time (no simultaneous motions) = 247.8 TMU = 8.92 seconds

Problem 2 (10 points)

You performed a time study for a factory operation and obtained the following table

Element 1 (min)	Element 2 (min)	Element 3 (min)
22	15	-
23	20	4
21	21	-
20	18	-
21	19	3

Assume that you gave the participant a rating of 100% and used a 9% total allowance only. Assume that one operator produced 14 pieces in one day. Also assume that a standard hour plan is adopted for this operation and that the wage rate is \$10/hr.

a) What are the operator earned hours for this operation?

Average elemental times:

$$\overline{ET_1} = \frac{22+23+21+20+21}{5} = 21.4 \text{ min}$$

$$\overline{ET_2} = \frac{15+20+21+18+19}{5} = 18.6 \text{ min}$$

$$\overline{ET_3} = \frac{4+3}{2} = 3.5 \text{ min}$$

Frequencies: element 1 in all 5 cycles ($f_1 = 5$), element 2 also 5 times ($f_2 = 5$), element 3 only 2 times ($f_3 = 2$).

Average elemental time for the *operation*:

$$\overline{ET} = \overline{ET_1} + \frac{f_2}{f_1}\overline{ET_2} + \frac{f_3}{f_1}\overline{ET_3} = 21.4 + \frac{5}{5}(18.6) + \frac{2}{5}(3.5) = 41.4 \text{ min}$$

Rating is 100%, so

$$NT = \overline{ET} \times \frac{R}{100} = 41.4 \times 1 = 41.4 \text{ min (normal time per piece)}$$

Standard time with 9% allowance:

$$ST = 41.4 \times (1 + \frac{9}{100}) = 45.13 \text{ min per piece}$$

Operator earned hours for this operation

Operator produced 14 pieces:

$$\text{Earned minutes} = 14 \times ST = 14 \times 45.13 \approx 631.82 \text{ min}$$

$$\text{Earned hours} = \frac{631.82}{60} \approx 10.53 \text{ h}$$

b) What is the operator efficiency if it really takes 8 hours to produce 14 pieces?

$$\text{Efficiency} = \frac{10.53}{8} \approx 1.32 \;\Rightarrow\; 132\%$$

c) What is the direct labor cost for this operation for this day? Assume that this worker is the only one working on this operation.

$$\text{Direct labor cost} = H_E \times \text{wage rate} = 10.53 \times \$10 \approx \$105.3$$

Problem 3 (7 points)

During the course of a workday, a machine operator is simultaneously exposed to sound from three metal presses in his work cell. The measured levels of noise exposure in dB for each press are listed in the table below.

Machine	**dB Level**
Machine A	88
Machine B	87
Machine C	86

a) Considering the dB levels, calculate the permissible noise exposure limit for each machine.

b) Assume that exposure to each machine are as follows: Machine A = 5 hrs; Machine B = 2 hrs; Machine C = 1 hr. What is the accumulated noise dose for the worker?

c) Given the calculated dosage, what is the 8-hr. time-weighted average (TWA) exposure for the worker?

d) Does the calculated TWA exceed the OSHA maximum permissible limit for an 8-hour workday?

a) Permissible exposure limit for each machine (hours):

$$L_{T,A} = \frac{8}{2^{(88-90)/5}} \approx 10.56 \text{ hr}, \qquad L_{TB} \approx 12.13 \text{ hr}, \qquad L_{TC} \approx 13.93 \text{ hr}$$

b) Noise dose:

$$D = \frac{5}{10.56} + \frac{2}{12.13} + \frac{1}{13.93} \approx 0.71$$

c) 8-hr TWA exposure:

$$\text{TWA} = 16.61 \log_{10}(D) + 90 \approx 16.61 \log_{10}(0.71) + 90 \approx 87.53 \text{ dBA}$$

d) Since $87.53 < 90$ dBA, the calculated TWA does *not* exceed the OSHA maximum permissible limit for an 8-hour workday.

Problem 4 (13 points)

Below is a data set of observations on human performance in a Fitts' task. It includes the amplitude of motion, the target size and motion times.

MT (sec.)	A (in.)	W (in.)
1.5	8	4
2.5	15	4
3.0	18	2
3.5	20	1.5
4.5	30	1

a) Calculate the Index of Difficulty (ID), rounded to the nearest integer, for each task condition.

b) The linear two-parameter motor performance model for this operator is given by:

$$\boxed{MT \approx 0.2 + 0.7\,ID \text{ (seconds)}}.$$

Below are the linear two-parameter models for Operators 2 and 3. Who is the most productive operator among the three operators and how do you know this? Which operator will produce the shortest MTs and why? (Be specific about the reason.)

Operator	Two-parameter model
Operator 2	MT = 1 + 2*ID
Operator 3	MT = 2 + 3*ID

c) What two (2) suggestions would you make if you wanted to reduce total movement time?

a) Using $ID = \log_2\left(\frac{2A}{W}\right)$:

Condition	A (in)	W (in)	ID (bits, rounded)
1	8	4	$\log_2(4) = 2 \approx \mathbf{2}$
2	15	4	$\log_2(7.5) \approx 2.91 \approx \mathbf{3}$
3	18	2	$\log_2(18) \approx 4.17 \approx \mathbf{4}$
4	20	1.5	$\log_2(26.\overline{6}) \approx 4.74 \approx \mathbf{5}$
5	30	1	$\log_2(60) \approx 5.91 \approx \mathbf{6}$

b) For the three operators:

$$\begin{aligned}
&\text{Operator 1: } MT = 0.2 + 0.7\,ID,\\
&\text{Operator 2: } MT = 1 + 2\,ID,\\
&\text{Operator 3: } MT = 2 + 3\,ID.
\end{aligned}$$

A lower MT means faster movements, which means more output per unit time.

For any $ID > 0$,

$$0.2 + 0.7\,ID < 1 + 2\,ID < 2 + 3\,ID,$$

so Operator 1 is the most productive and will always have the shortest movement times, because both its intercept and slope are smallest (lower base time and less increase in time as ID grows).

c) To reduce total movement time, you should reduce the Index of Difficulty ID. Two concrete design suggestions:

- Decrease movement amplitude A: place targets (buttons, icons, controls) closer to the starting position.
- Increase target width W: make the targets larger / wider so they are easier to hit.

Since $ID = \log_2(2A/W)$, decreasing A and increasing W both reduce ID, and therefore reduce MT.

Problem 5 (12 points)

A barista was trying to see whether a customer could distinguish between regular iced coffee and the fancier "cold-brew" coffee (the target in this example). There were 20 trials, divided evenly between the iced-coffee and the cold-brew coffee (10 each). The customer indicated that he drank cold-brew coffee in 11 of the trials. However, only 9 of these trials were actually cold-brew coffee.

(a) (5 pts) Calculate the hit, miss, false alarm, and correct rejection rates.
Number of hits: 9 Hit rate $= 9/10 = 0.9$
Number of misses: 1 Miss rate $= 1/10 = 0.1$
Number of false alarms: 2 False alarm rate $= 2/10 = 0.2$
Number of correct rejections: 8 Correct rejection rate $= 8/10 = 0.8$

(b) (7 pts) What are the d' and β of the customer?
$z(P(H)) = z(0.9) = 1.28$
$z(P(FA)) = z(0.2) = -0.84$
$O(1.28) = 0.1758, \quad O(-0.84) = 0.2803$
$d' = z(p(H)) - z(p(FA)) = 1.28 - (-0.84) = 2.12$
$\beta = O(z(H))/O(z(FA)) = 0.1758/0.2803 = 0.627$
Therefore, $d' = 2.12$ and $\beta = 0.627$.

Problem 6 (13 points)

A worker is required to move tote boxes from an incoming flat conveyor to an outgoing J-hook at a rate of approximately three boxes per minute. Each box weighs 15 lbs, and this task is performed continuously for 8 hours per day. The worker can comfortably grasp the box, and it is assumed that the horizontal distance between the ankles and the hands is 16 in and remains relatively constant during the lift. During the transfer to the conveyor, it is estimated that the worker must twist their torso approximately 80°.

Compute the Lifting Index (LI) for this task. What conclusions can you make about the job design?

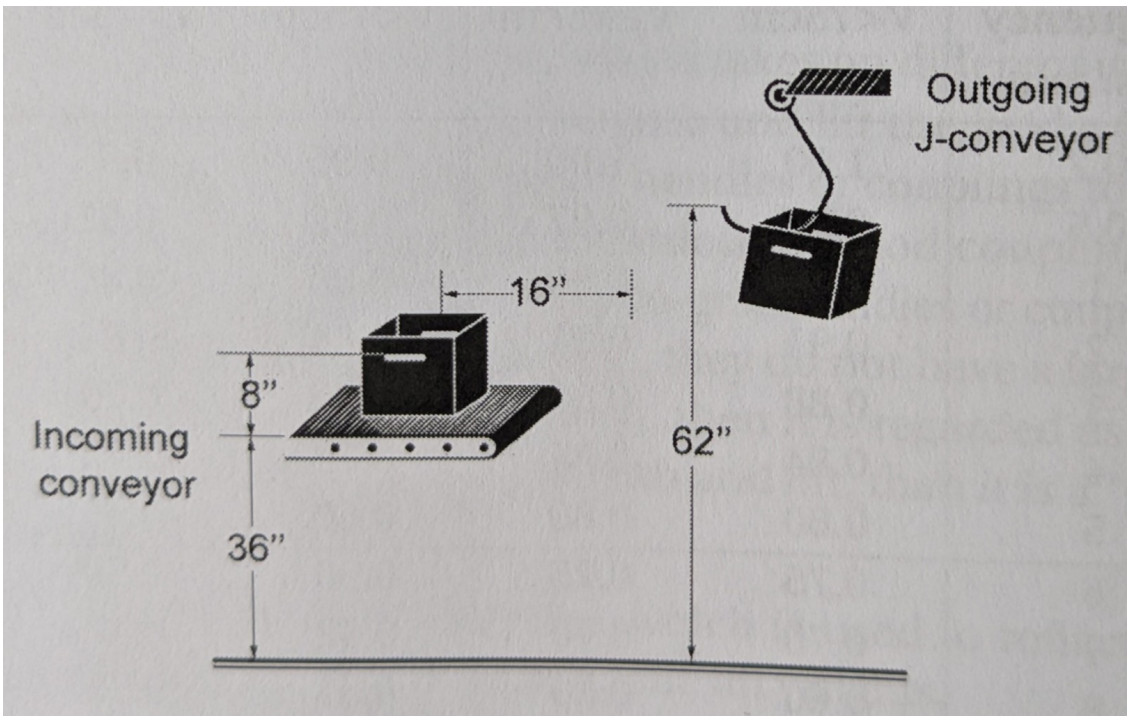

Given:

$$L = 15 \text{ lb}, \quad H = 16 \text{ in}, \quad V = 44 \text{ in}, \quad V_2 = 62 \text{ in},$$

$$D = |62 - 44| = 18 \text{ in}, \quad A = 80°, \quad F \approx 3 \text{ lifts/min},$$

8-hour shift (long duration), good coupling, and load constant $LC = 51$ lb.

The Revised NIOSH Lifting Equation is

$$RWL = LC \cdot HM \cdot VM \cdot DM \cdot AM \cdot FM \cdot CM.$$

Horizontal multiplier:

$$HM = \frac{10}{H} = \frac{10}{16} = 0.625.$$

Vertical multiplier:

$$VM = 1 - 0.0075|V - 30| = 1 - 0.0075|44 - 30| = 0.895.$$

Distance multiplier:

$$DM = 0.82 + \frac{1.8}{D} = 0.82 + \frac{1.8}{18} = 0.92.$$

Asymmetry multiplier:

$$AM = 1 - 0.0032A = 1 - 0.0032(80) = 0.744.$$

Frequency multiplier: for $F = 3$ lifts/min, long duration, $V > 30$ in,

$$FM = 0.55.$$

Coupling multiplier: good coupling, $V > 30$ in,

$$CM = 1.0.$$

Thus,

$$\begin{aligned} RWL &= 51 \times 0.625 \times 0.895 \times 0.92 \times 0.744 \times 0.55 \times 1.0 \\ &\approx 10.74 \text{ lb.} \end{aligned}$$

The Lifting Index is

$$LI = \frac{L}{RWL} = \frac{15}{10.74} \approx 1.4.$$

Therefore, the lifting task has a lifting index of approximately

$$\boxed{LI \approx 1.4},$$

indicating an elevated risk (LI > 1) The job needs to be redesigned.